B14 HMR MAGNUM EXPLODED DRAWING

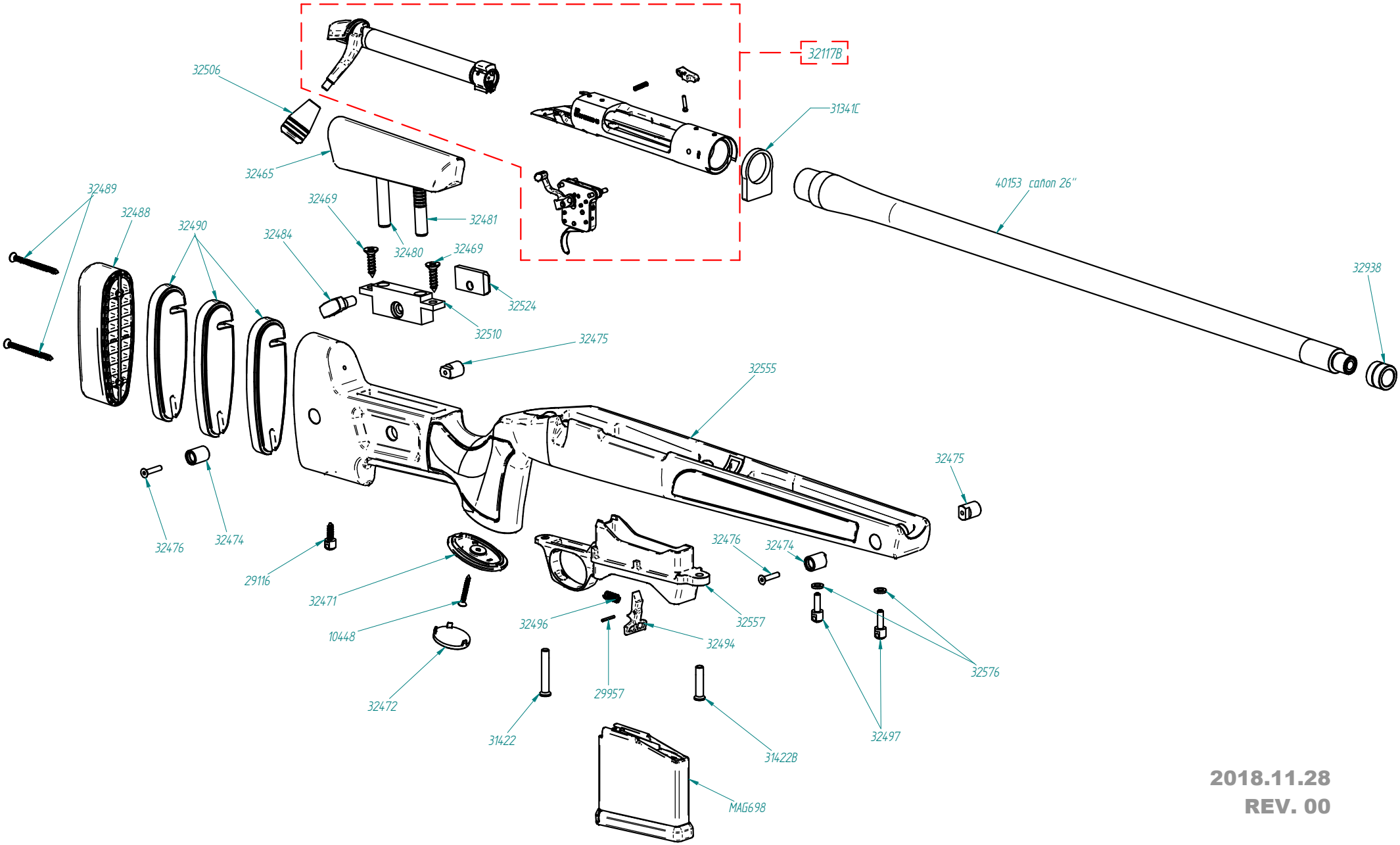

2018.11.28
REV. 00